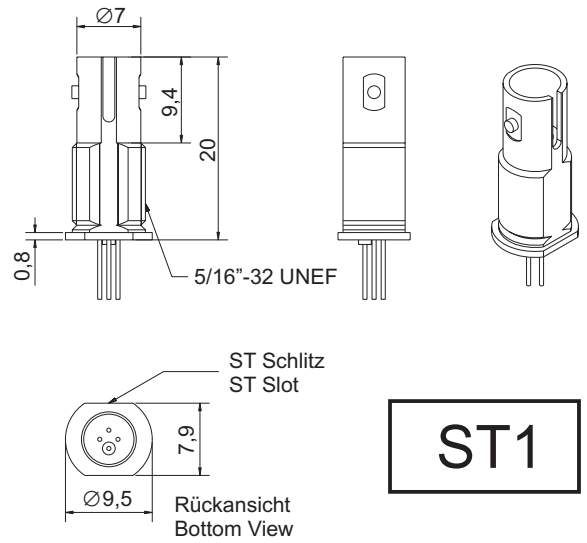

ST1

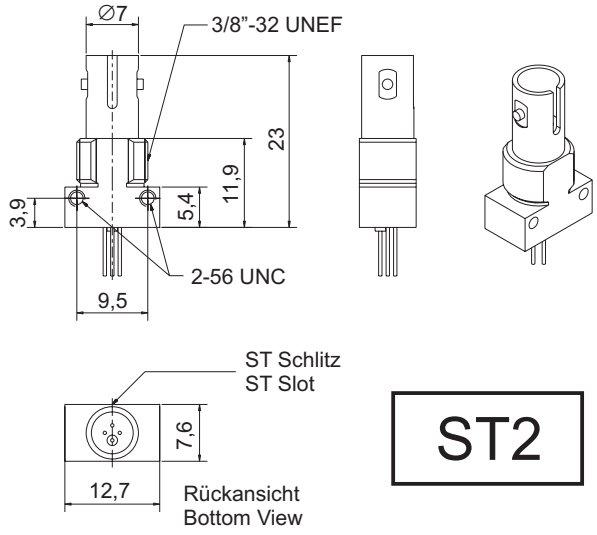

ST2

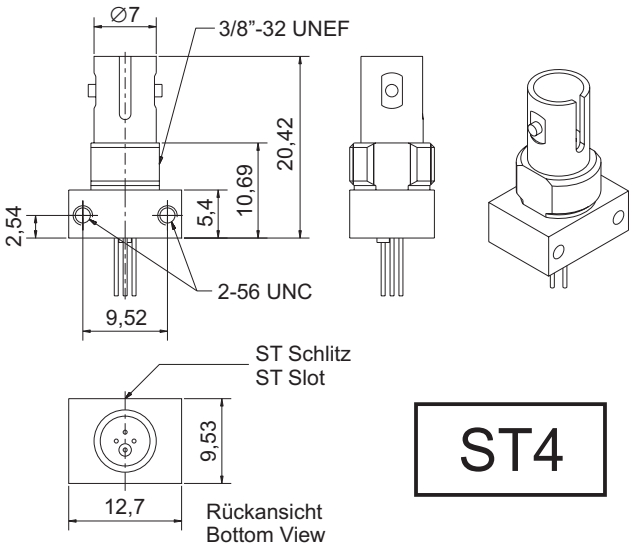

ST4

Pigtail: Länge 1m / Length 1m mit / with:
1,25 mm Ferrule; 2,50 mm Ferrule; DIN; E2000; FC; SC; ST; SMA

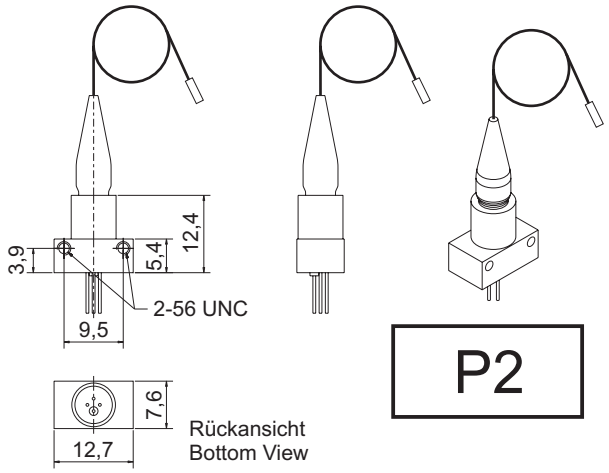

P2

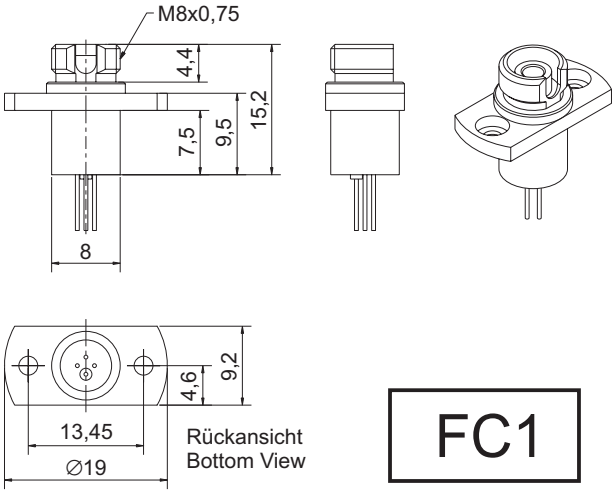

FC1

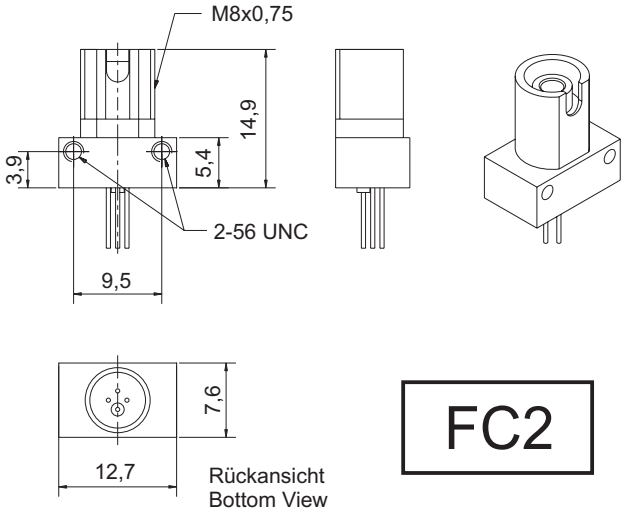

FC2

Electro Optical Components, Inc.

5460 Skylane Boulevard, Santa Rosa, CA 95403
Phone: (707) 568-1642 • FAX: (707) 568-1652
www.eoc-inc.com

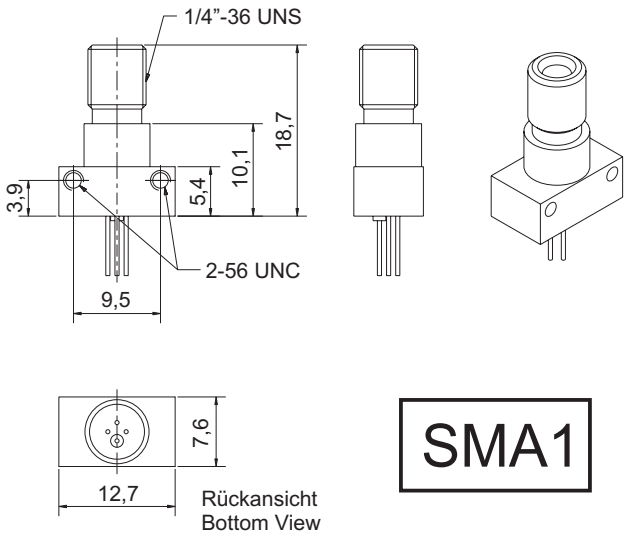

SMA1

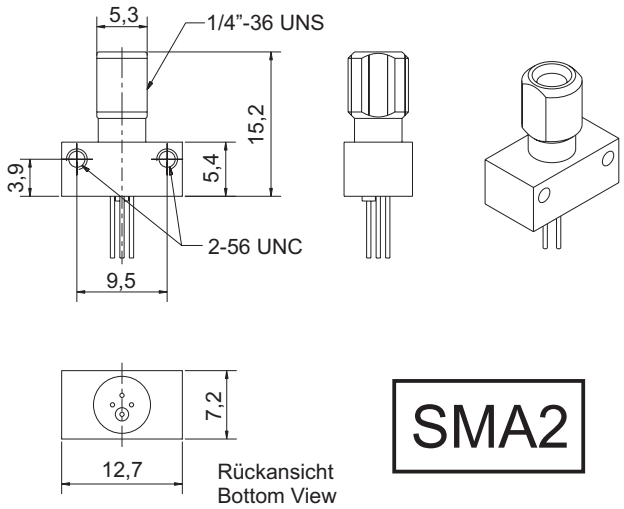

SMA2

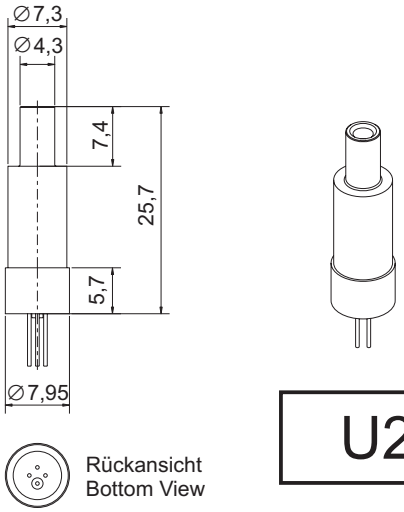

U2

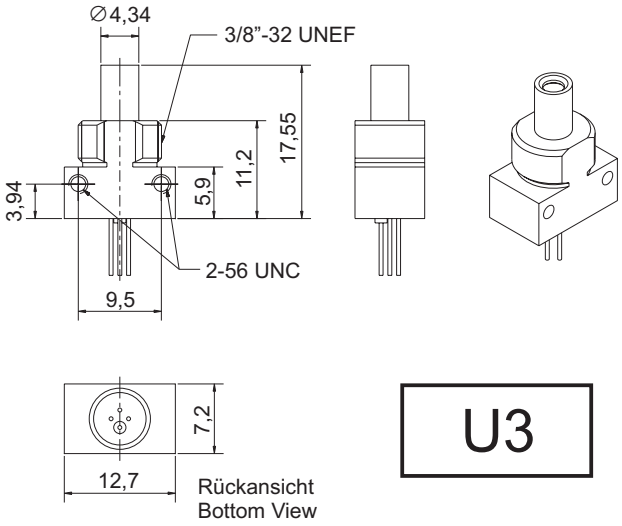

U3

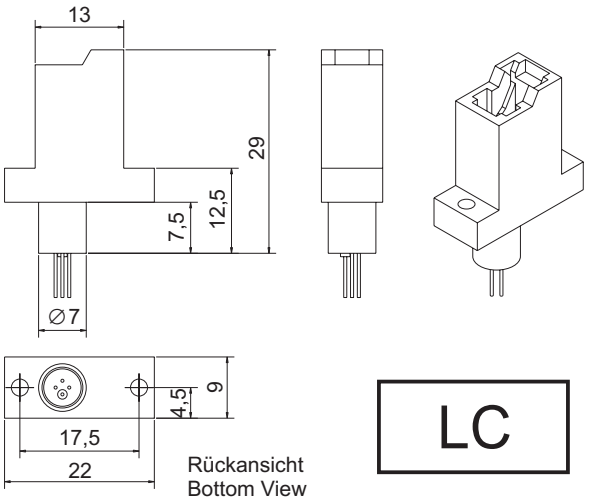

LC

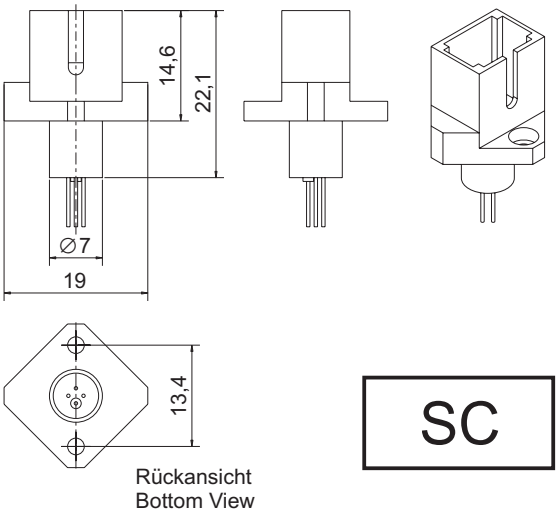

SC

Electro Optical Components, Inc.

5460 Skylane Boulevard, Santa Rosa, CA 95403
Phone: (707) 568-1642 • FAX: (707) 568-1652
www.eoc-inc.com